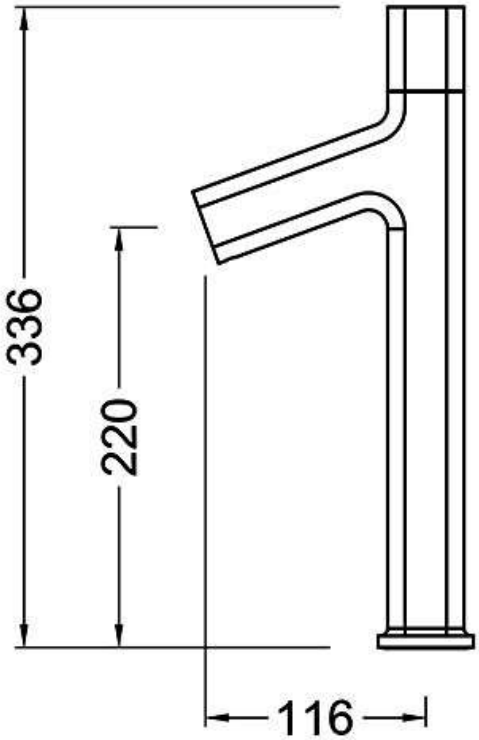
336
220
116

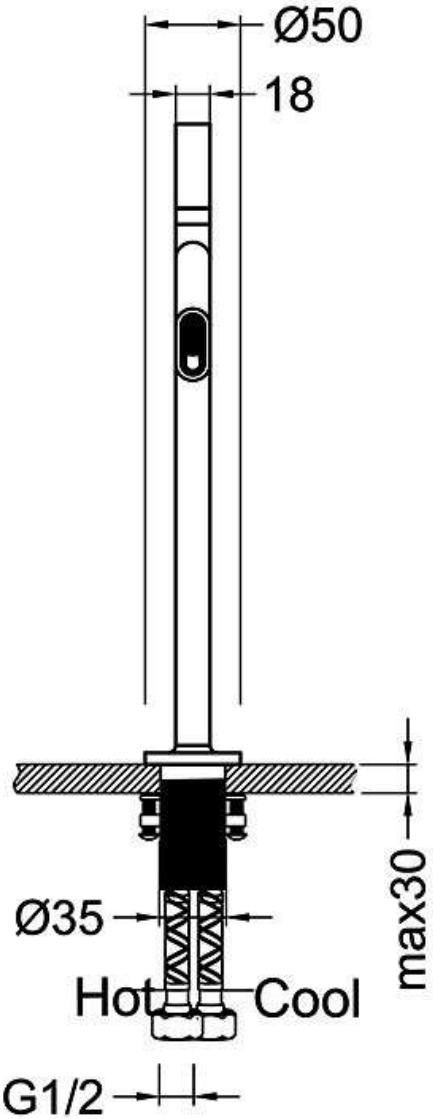
Ø50
18
Ø35
max30
Hot
Cool
G1/2